infrastructure protection INC

TZ SlideHandle™

Model Number: 4272CF

TZ SlideHandle is an intelligent locking device that offers a drop-in replacement for legacy manual swing-handle data center cabinet locks. The device integrates a high load Shape Memory Alloy (SMA) actuated locking mechanism with touch to release option, a multi-color LED status indicator, manual key over-ride, electronic door status sensor and RJ-45 connector.

TZ SlideHandle is powered and controlled via standard UTP Cat5e / Cat6 cabling through a TZ Praetorian Junction or TZ Centurion Bridge.

features

- Simple surface mounted installation on outside of door
- Mechanism provides industry standard one quarter turn action
- High load, SMA actuated locking mechanism with touch to release function
- Incorporates manual multi-key over-ride
- Powered and controlled by TZ Praetorian Junction or TZ Centurion Bridge
- Visual status indication
- External sensors for door status (locked/closed, unlocked/closed, unlocked/open, locked/open)

benefits

- Surface mount design retrofits existing manually keyed swing handle latching systems to enable integrated electronic security and sensing
- Fits most cabinet brands with mounting hardware suitable for industry standard 25mm wide swing handle openings eliminating need for on-site door modifications
- Compatible with currently available single-point and multi-point latching as well as split French doors
- Integrates manual keyed over-ride in the event of power failure which also facilitates initial installation
- Integrated electronics and sensors report on true door status, including manual over-ride mode and forced entry which provides complete audit trail
- Connects into RJ-45 based twisted pair cabling infrastructure with standard patch cables which can provide power up to 100 meters for large installations
- Bright LED status band visible up to 30m indicates locked /unlocked and ready to unlock states

TZ SlideHandle™ is a trademark of Telezygology, Inc.

TZ SlideHandle™

Model Number: 4272CF

specifications overview

Specifications subject to change to suit particular application requirements

physical and mountings

Dims (mm): 182.3mm tall (207.3mm when open), 43.5mm wide, 35.9mm out from door, 21.2mm in from door

Dims (inches): 7.17” tall (8.16” when open), 1.71” wide, 1.41” out from door, 0.83” in from door

Mounting: via 2 x M4 (#8) screws and clamp piece. Mounts to doors with standard 25mm x 150mm (5.9” x 1”) or 25mm x 125mm (4.9” x 1”) opening (with or without center of cutout blanked). 5mm max door panel thickness.

Grip dimensions of 3mm to 24mm can be accommodated with standard spacers and locking cams. Contact TZ for specific application requirements.

environmental and performance

Operating temperature: -15°C to +55°C (5°F to 131°F)

Survival temperature: -55°C to +85°C (-67°F to +185°F)

Humidity (operating): 95% RH at 50°C (122°F)

Operating cycles: MTTF > 125,000

Ingress protection: IP 51

electrical

Supply voltage: 9.0 – 32.0 VDC

Power consumption (operating): < 3.5 W average

Power consumption (standby): < 400 mW

RJ-45 pin-out: 1: +Coms, 2: -Coms, 3: AUX-OUT1, 4: AUX-IN1, 5: Gnd, 6: AUX-OUT2, 7: AUX-IN2, 8: +V

standards compliance

FCC Part 15, CE, UL (c-us) per IEC/UL/CSA 60950-1 Pending

RoHS compliant, One Year Limited Warranty
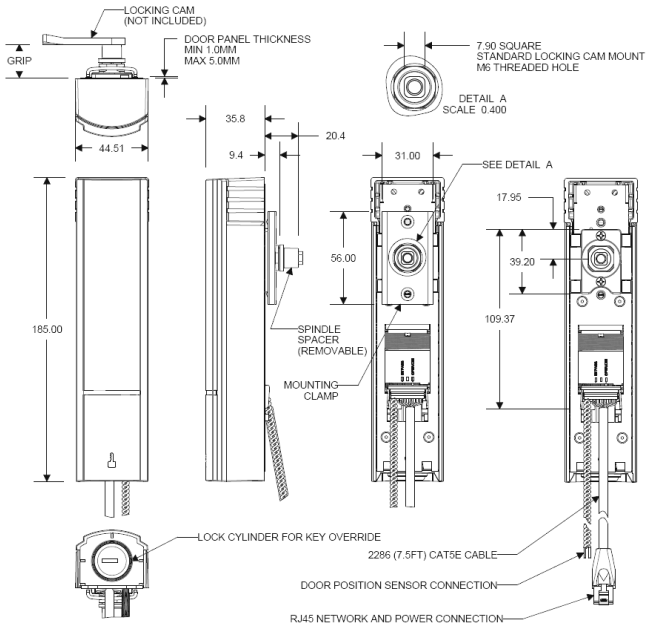
dimensions (mm)